CUSTOMER:	
JOB:	MOLD: CC-456
BAY#: 180-A	STONE COLOR:
DATE:	SCALE: 1"=12" NEED:

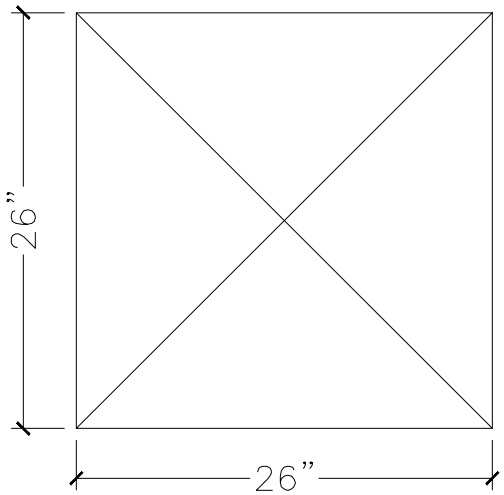

TOP VIEW

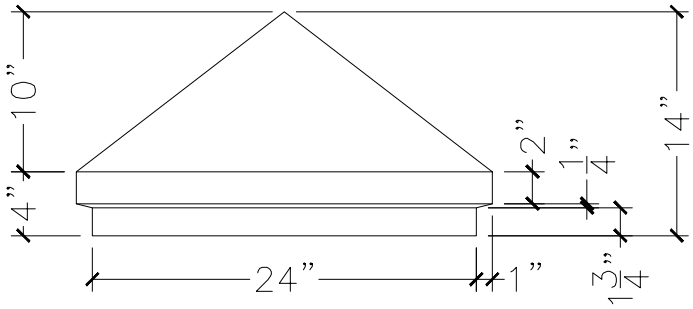

FRONT VIEW

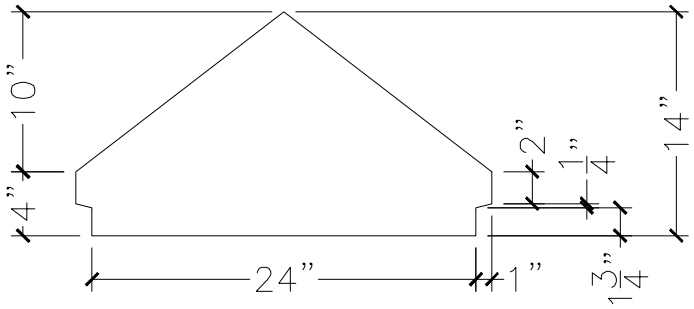

SECTION VIEW